KB621,2,5,8RXLB,1RXLBMB
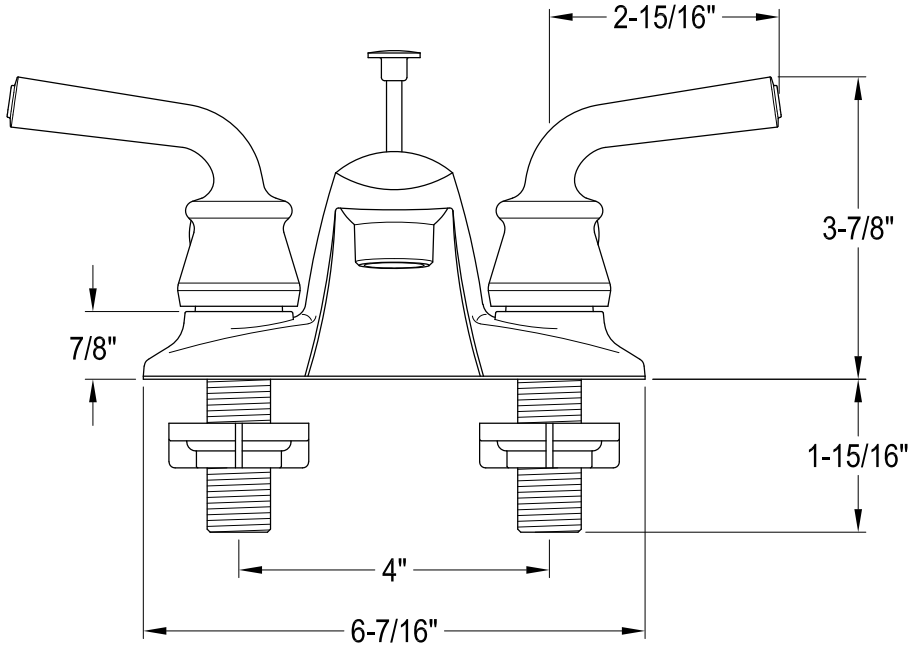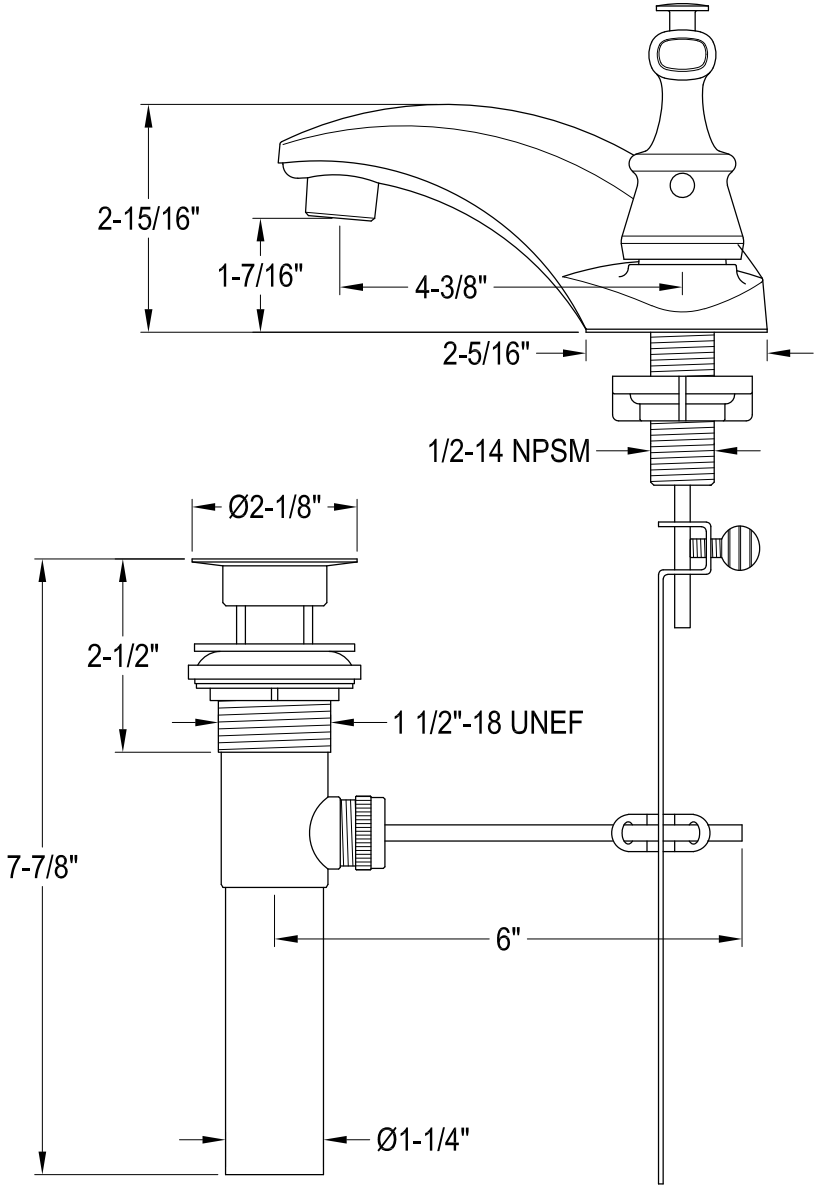
Twin Handles 4" Centerset Lavatory Faucet with Brass Pop-Up